IP67

FEATURES:

- NFC technology programmable without driver power on
- Constant power programmable design
- High efficiency (Max 94%), active power factor correction
- Ultra low THD at light load
- 0~10V/ PWM/ Timer,Dim to off option
- 12V/200mA AUX Output
- UL recognized with HL/ TL/Surge(Diff:4kV, Common:6kV)
- 5 year limited warranty

Electrical Specifications

Model:		MWP200CV 24-36F	MWP200CV 36-48F	MWP200CV 48-80F	MWP200CV 80-140F	MWP200CV 140-233F
Output	Max Output Power	200W				
	Constant Power Output Voltage Range	24-36Vdc	36-48Vdc	48-80Vdc	80-140Vdc	140-233Vdc
	Constant Power Output Curent Range	5.56-8.33A	4.17-5.56A	2.5-4.17A	1.43-2.5A	0.86-1.43A
	Programmable Constant Current Region	3.33-8.33 A	2.22-5.56A	1.67-4.17 A	1-2.5A	0.57-1.43 A
	Open load Voltage	1.05Vp(Vp:Programmable Output Voltage)				
	Line Regulation	±0.5%				
	Load Regulation	±3%				
	Ripple & Noise Pk-Pk	2%Vo				
	Eff.@ 115Vac & 100%load	90%	90%	91%	92%	91%
	Eff.@ 230Vac & 100%load	92%	92%	93%	94%	93%
	Turn-On Delay Time	<0.5S(100Vac,100%Load)				
	Dimming	0-10V(0%-100%)				
	Temperature Coefficient Of loset	0.05%/°C				
	Auxiliary output	12V/200mA				
Input	AC Current Max	1.77A Max. @100Vac				
	Rated Input Voltage Range	100-277Vac				
	Input Voltage Range	90-305Vac				
	Frequency Range	50/60Hz				
	Power Factor(PF)	PF>0.97 (Vin 230Vac 100%load),PF>0.95(Vin277Vac 70%load)				
	THD	<20% (100-277Vac,50-100%Load)				
	Standby Power	0.4W(Measured at 230Vac,Dimming off)				
	Inrush Current Max	65A @230Vac Ta=25°C				
	Leakage Current	<0.75mA @ 277Vac				
Protection	Short Circuit Protection (SCP)	In the event of a short circuit condition, there will be no damage to the driver， then automatic self-recovery will be activated.				
	Surge Protection	Line to Line: 4KV, Line to Earth: 6KV				
	Over Temperature Protection	When the Internal PCB temp reaches 105°C (±5°C), to avoid any damage to the driver, its output will be turned off. After the temperature drops below 105°C, automatic self-recovery mode will be activated.				

Environment	Ambient Temperature	Ta :-40～+70℃; Tc (max):≦ 90℃
	Operating Humidity	20～90% RH
	Storage Temperature & Humidity	-40～+80°C, 10～95% RH
	Environment Protection Rating	UL Dry, Damp or Wet Location, IP67
	Vibration	10～500Hz 5G 12Min/Cycle， X,Y,Z axis per 72 minute
Safety & EMC	Safety Standards	IEC/EN61347-1(GB19510-1-2009), IEC/EN61347-2-13(GB 19510.14-2009), UL8750, CSA C22.2 NO. 250.13-12
	Withstand Voltage	I/P-O/P:3.75KVac, I/P-FG:1.5KVac,O/P-FG:0.5KVac
	Insulation Resistance	I/P-O/P, >100M Ohms/500VDC/25°C/70%RH
	EMI	EN55015, FCC PART15-CLASSB
	Harmonic Current	EN61000-3-2 Class C
	EMS	EN61000-4-2,3,4,5,6,8,11;ENV50204,EN61547,EN55024 Industry standard
Others	MTBF	＞270kHrs to MIL-HDBK-217 at25℃,GB
	Dimensions	226*70*37mm (L*W*H),8.9*2.76*1.46in (L*W*H)
	Weight	832±10g 25pcs/carton

V-I Operating Area

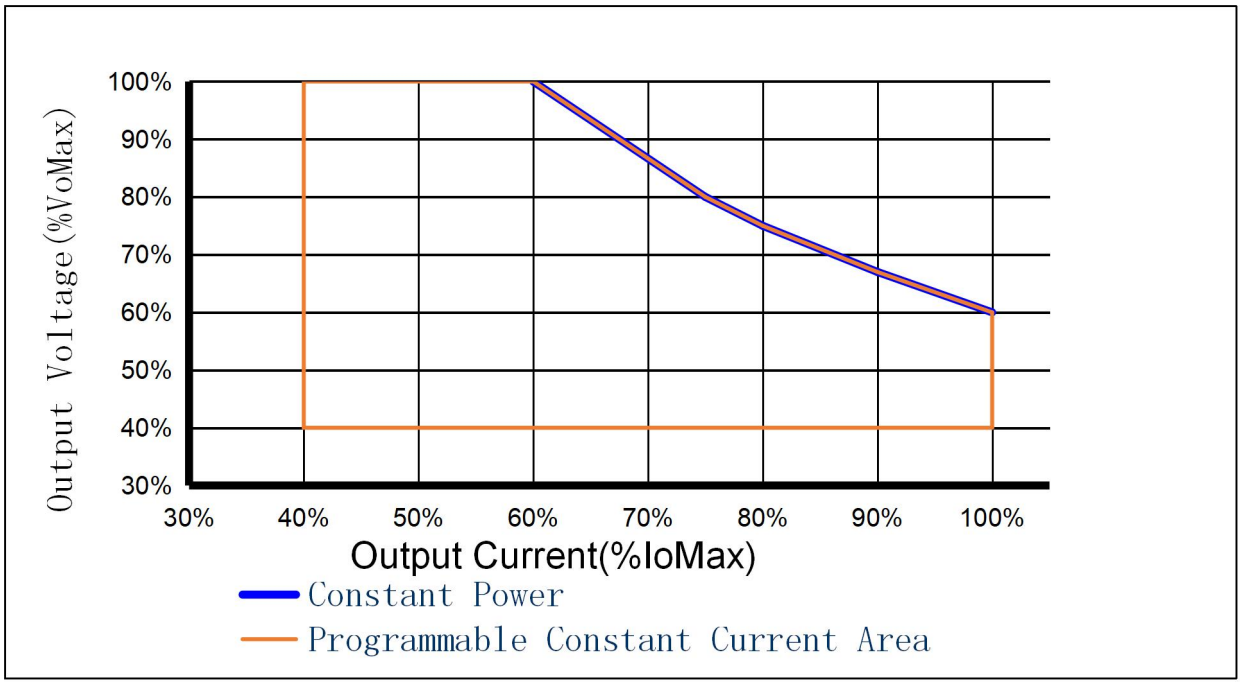

Wiring Diagram

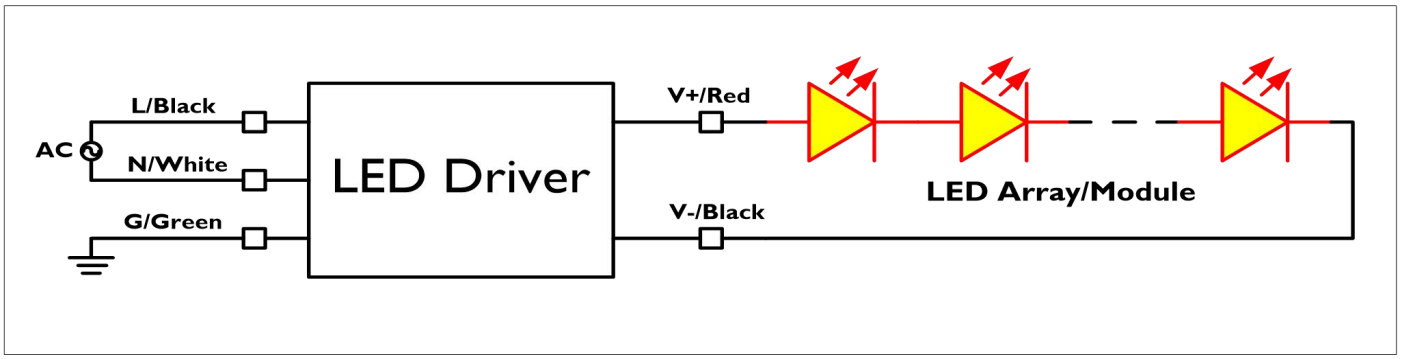

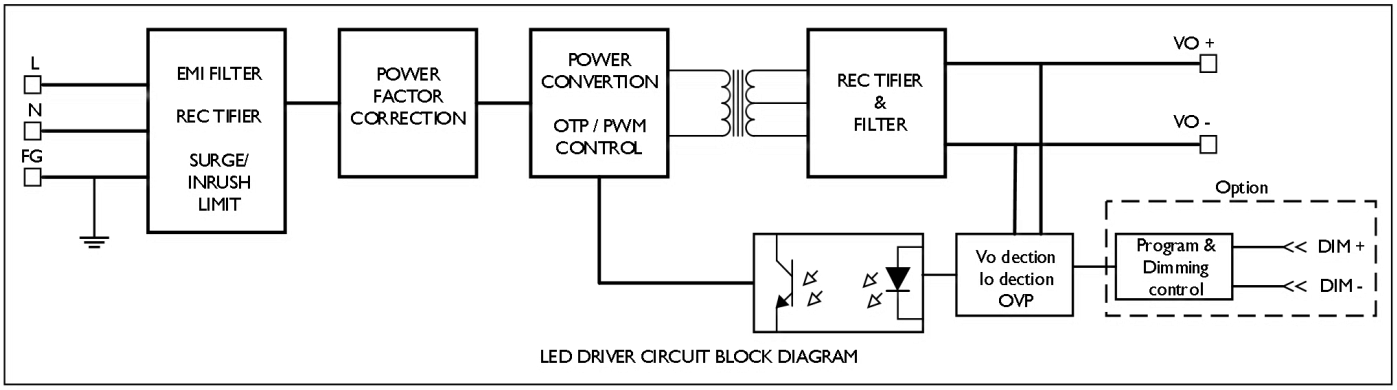

LED DRIVER CIRCUIT BLOCK DIAGRAM

Enclosure

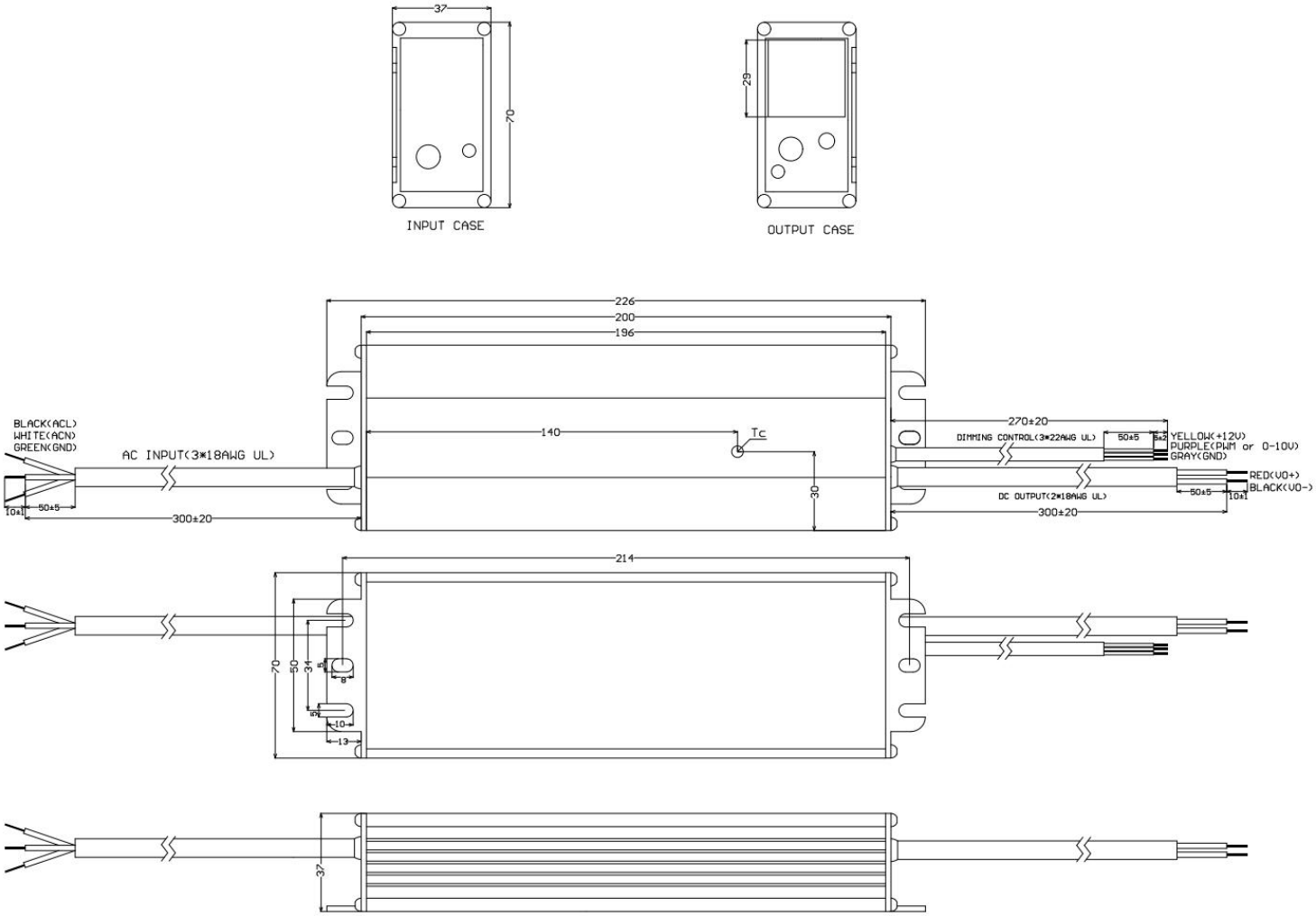

Installation & Application Notes

Section I – Physical Characteristics

1.1 LED Driver shall be installed inside an electrical enclosure.

1.2 Wiring inside electrical enclosure shall comply with 600V/105°C rating or higher.

1.3 Input and output use lead-wires. Lead-wires are UL SJTW Cable 18AWG 105C/600V solid copper.

1.4 Special water proof should be used on the input/output cable, this product is non-potting, water maybe suck in the product.

Section II – Performance

2.1 LED Driver has a minimum operating ambient temperature of -40°C.

2.2 LED Driver is certified by UL for use in a dry, damp or wet location.

2.3 LED Driver tolerates sustained open circuit and short circuit output conditions without damage.

2.4 LED Driver maximum allowable case temperature is 90°C .

2.5 LED Driver reduces output power to LEDs if maximum allowable case temperature is exceeded.

Section III –Cautions

3.1 LED Driver should be kept away from heat source and flammable and explosive substances.

3.2 LED Driver Should be installed in a ventilated and good heat dissipation space.

3.3 High Voltage! Do not open the case without experience.

3.4 Make sure I/P, O/P wire joints completely watertight, to prevent electric shock & leakage of electricity.

Efficiency

MWP200CV36-48F Efficiency vs Output

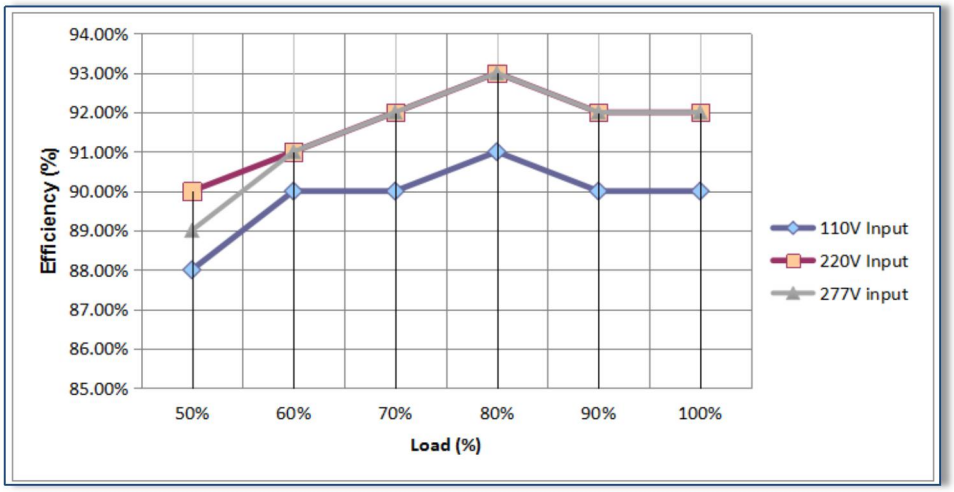

THD

MWP200CV36-48F THD vs Output

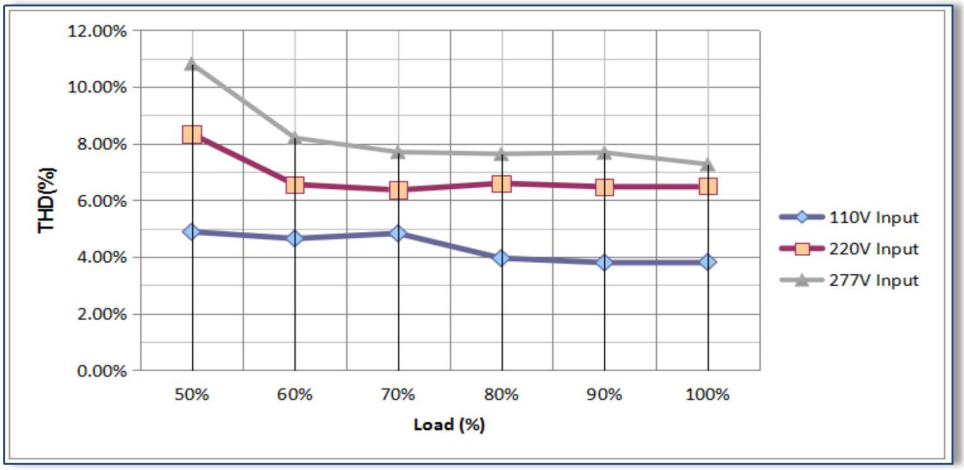

Power Factor

MWP200CV24-80F PF vs Input Voltage

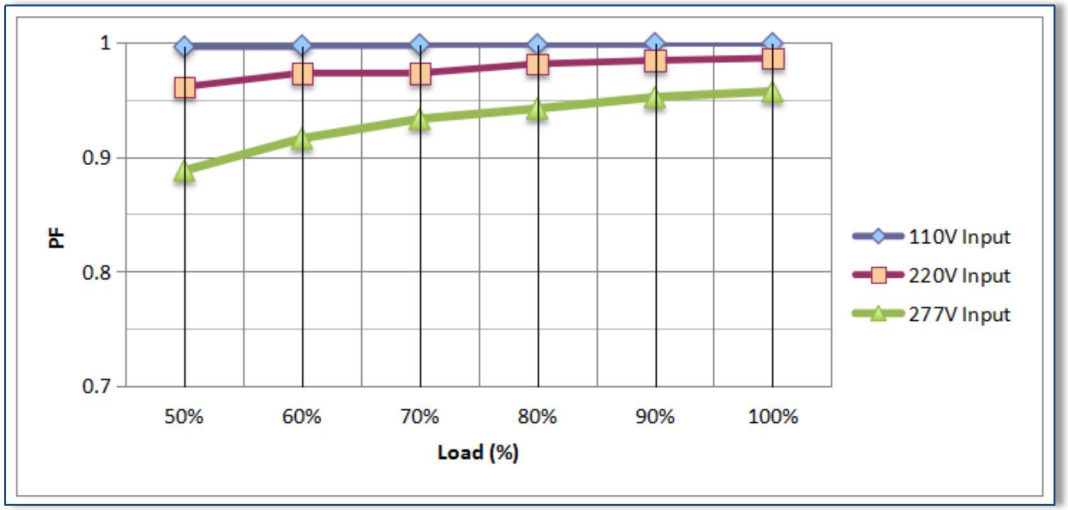

Static Characteristics

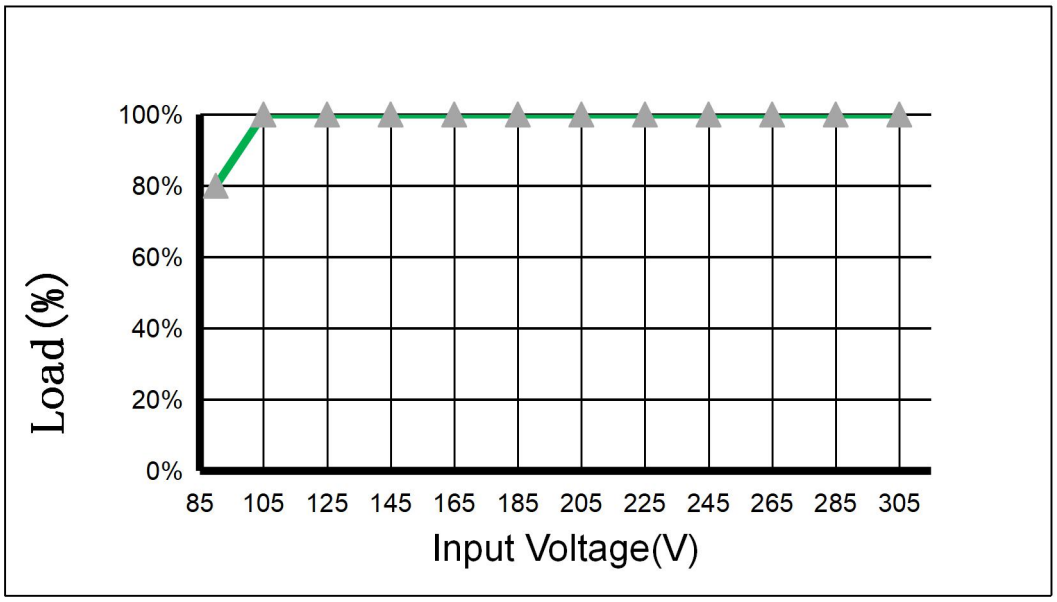

Output Power Derating

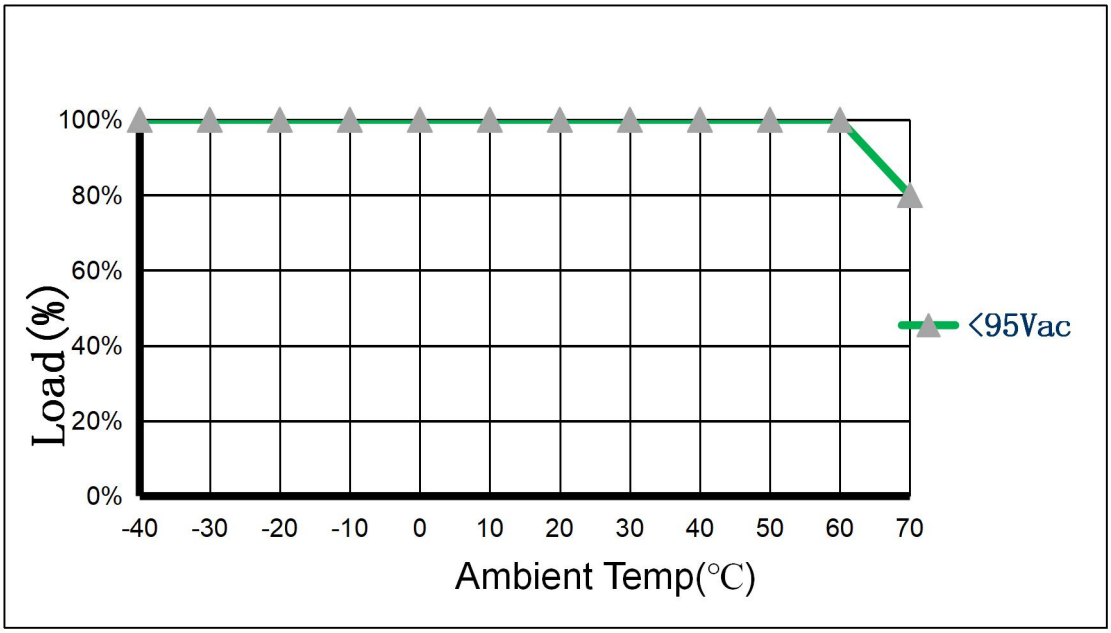

0-10V Dimming Application (Optional Function)

0-10V Dimming

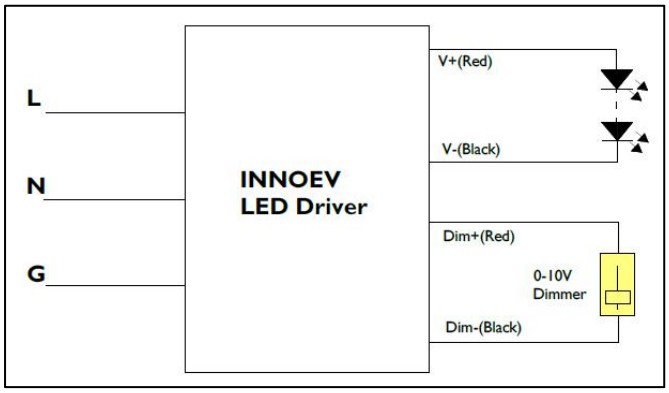

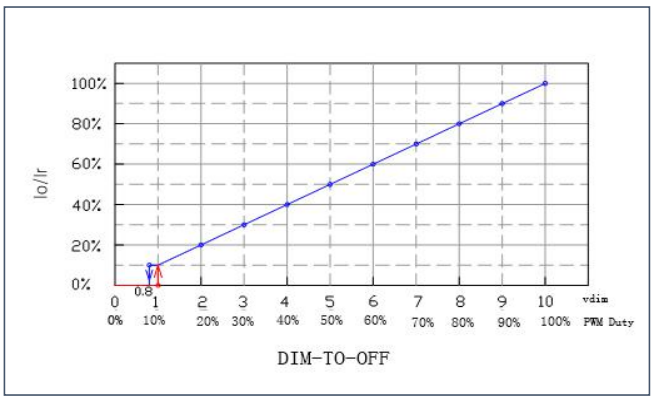

GND	Grey
Dimming wire 0-10V&PWM	Purple
12V AUX	Yellow
Input Dimming Voltage	0-10V
DIM+ Source Current	0-1mA
12V AUX Source Current	200mA
PWM Frenquency Range	0.5 ~ 3 KHZ
PWM high level	10V

NOTE:

1. Io is actual output current and Ir is rated current without dimming control.
2. For the driver to operate properly, the load voltage must be in the working voltage voltage range.
3. We have DIM-TO-OFF option can be programmed by the programmer.
4. Maximum input voltage at dimming wire is 12V.
5. AUX wire is only for source, can't connect to other voltage source.

Revision History

DATE	REV	Modification	Reasons for change	Notes

Prepared By		Checked By		Approved By		File Number
Date		Date		Date		

Application and operation performance specification information subject to change without notification.